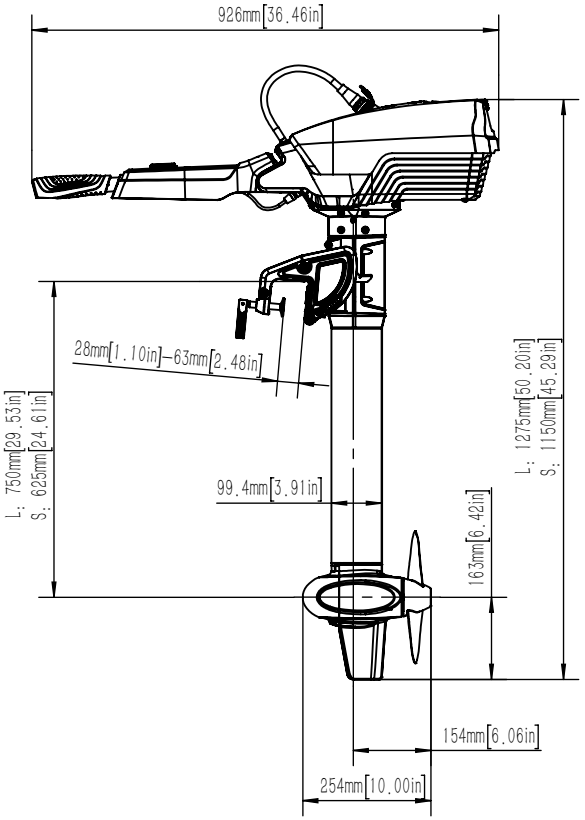

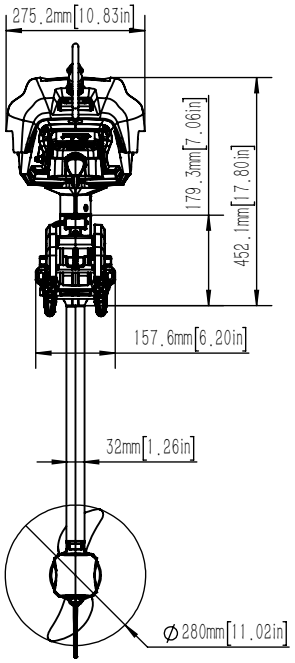

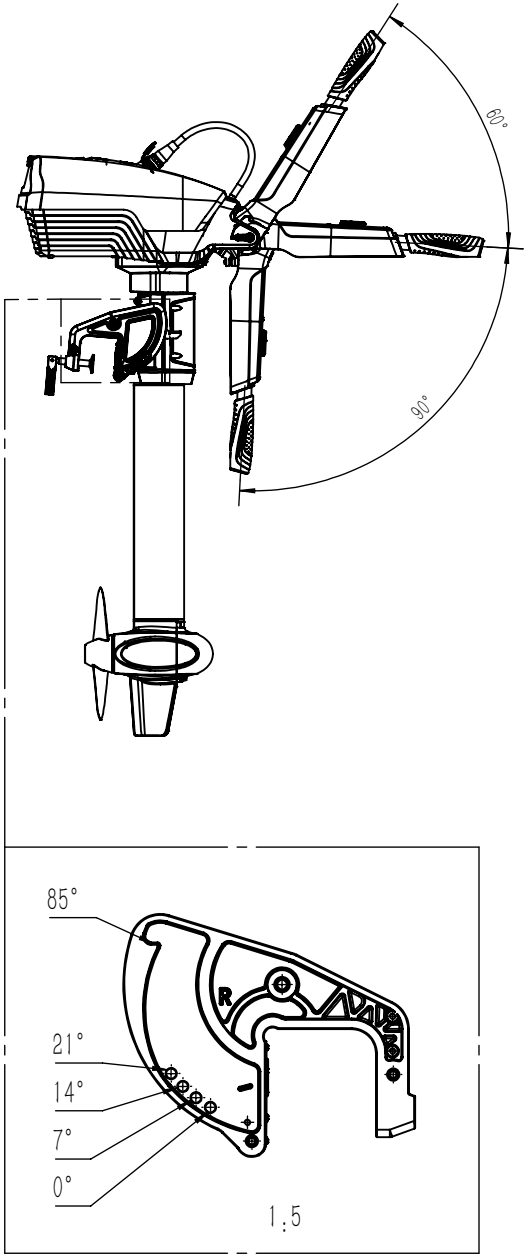

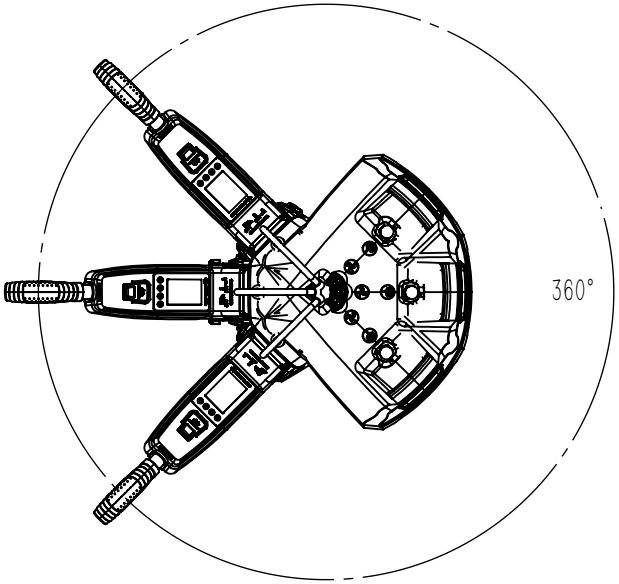

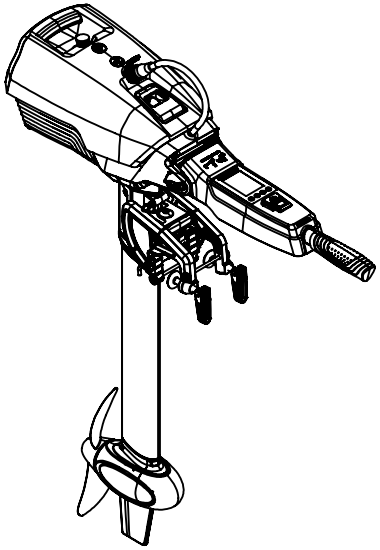

EPROPULSION			
Spirit 1.0 Evo			
Scale	1:15	Version	V1.0